PANZERI

Bella

120V AC dimmable
A052U01.011.0509

white

INDIRECT LIGHT

Spec sheet

CODE	A052U01.011.0509
SYSTEM POWER CONSUMPTION	6,5W
EFFICACY	64.67lm/W
LIGHT SOURCE	LED
LIGHT SOURCE LIFETIME	L80 (B10) 70.000h
COLOUR TEMPERATURE	2700K Ra>90
LIGHT DISTRIBUTION	adjustable
POWER SUPPLY	120V AC
FREQUENCY	60Hz
ELECTRICAL CONFIGURATION	dimmable
DRIVER	integrated included
NOMINAL LUMINOUS FLUX	460lm
DELIVERED LUMEN OUTPUT	388lm
EFFICIENCY	84.3%
WEIGHT	1,22 lbs
PROTECTION DEGREE	IP20
COLOUR TOLLERANCES	SDCM 3
PACKING DIMENSIONS	4,7 x 9,5 x 5,1 in

Ceiling or wall lighting fixture for interiors, with swivelling light beam.
Galvanized sheet metal ceiling or wall bracket.
Die-cast aluminium wall plate in white, black, bronze, mat brass or titanium polyacrylic paint.
Turned brass joints in polyacrylic paint.
Die-cast aluminium structure in polyacrylic paint.
Die-cast aluminium head rotating on three axes in polyacrylic paint.
Modelled acrylic diffuser with mat finish.
Aluminium closing disk in polyacrylic paint.
Push-button to adjust luminosity according to 5 levels of visual comfort.

Technical drawing

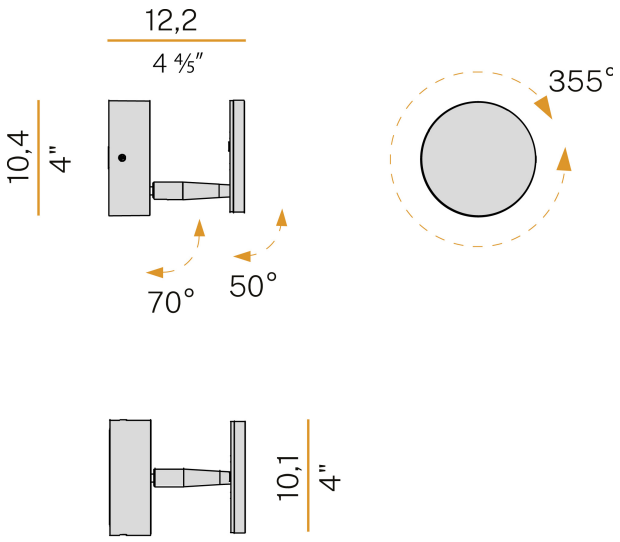

Application
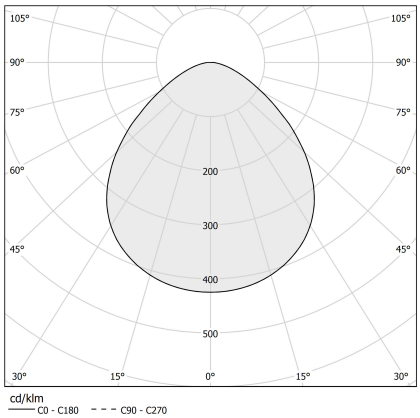
Polar diagram