PANZERI

Dip

120V AC 120V-277V dimmable (0-10V)
A084U06.070.0553

mat black

DIRECT LIGHT

Spec sheet

CODE	A084U06.070.0553
SYSTEM POWER CONSUMPTION	18W
EFFICACY	107.28lm/W
LIGHT SOURCE	LED
COLOUR TEMPERATURE	2700K Ra>90
LIGHT DISTRIBUTION	diffused
POWER SUPPLY	120V AC
FREQUENCY	50/60Hz
ELECTRICAL CONFIGURATION	120V-277V dimmable (0-10V)
DRIVER	integrated included
NOMINAL LUMINOUS FLUX	3013lm
DELIVERED LUMEN OUTPUT	1931lm
EFFICIENCY	64.1%
WEIGHT	2,64 Kg
PROTECTION DEGREE	IP40
COLOUR TOLLERANCES	SDCM 3
PACKING DIMENSIONS	49,0 x 119,0 x 19,0 cm

Wall installation lighting fixture for interiors, with direct or indirect light emission.
Power supply canopy with pickled sheet metal fixing bracket, deep-drawn sheet metal closing frame in polyacrylic paint.
Calendered steel tube stem, with polyacrylic paint.
Die-cast aluminum emitting head with polyacrylic paint in champagne, mat black, bronze and soft textured white finishes.
UV technology screen-printed diffuser, made of opal polycarbonate, installed with magnetic coupling.

Technical drawing

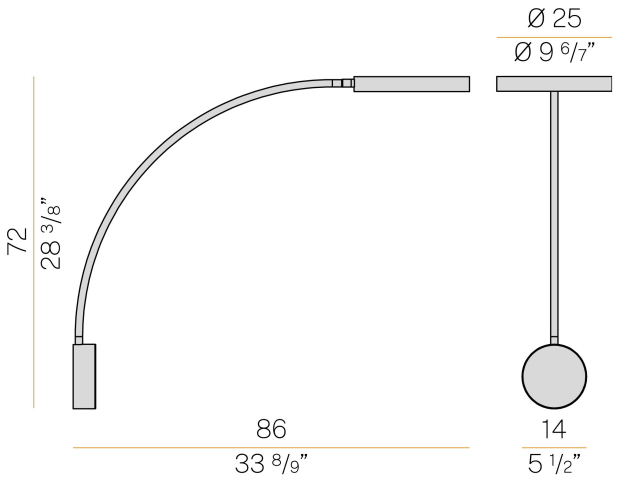
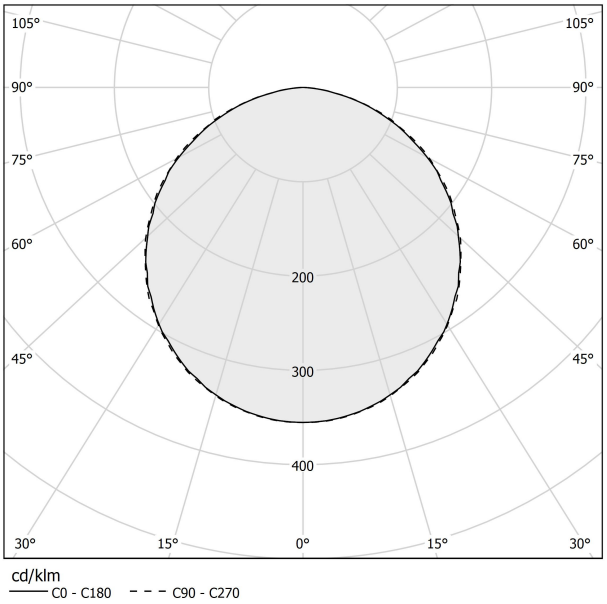
Polar diagram