PANZERI

Dip

120V AC 120V-277V dimmable (0-10V)
L084U05.000.0553

champagne

DIRECT LIGHT

Spec sheet

CODE	L084U05.000.0553
SYSTEM POWER CONSUMPTION	18W
EFFICACY	107.28lm/W
LIGHT SOURCE	LED
COLOUR TEMPERATURE	2700K Ra>90
LIGHT DISTRIBUTION	diffused
POWER SUPPLY	120V AC
FREQUENCY	50/60Hz
ELECTRICAL CONFIGURATION	120V-277V dimmable (0-10V)
DRIVER	integrated included
NOMINAL LUMINOUS FLUX	3013lm
DELIVERED LUMEN OUTPUT	1931lm
EFFICIENCY	64.1%
WEIGHT	1,98 Kg
PROTECTION DEGREE	IP40
COLOUR TOLLERANCES	SDCM 3
PACKING DIMENSIONS	27,0 x 27,0 x 56,0 cm

Suspension lighting fixture for ceiling installation for interiors, with direct light emission.
Power supply canopy with pickled sheet metal fixing bracket, deep-drawn sheet metal closing frame in polyacrylic paint.
Die-cast aluminum emitting head with polyacrylic paint in champagne, mat black, bronze and soft textured white finishes.
UV technology screen-printed diffuser, made of opal polycarbonate, installed with magnetic coupling.
Suspension kit with painted brass tube tige, power supplay and 3m (118.1") long suspension adjustable coaxial cable.

Technical drawing

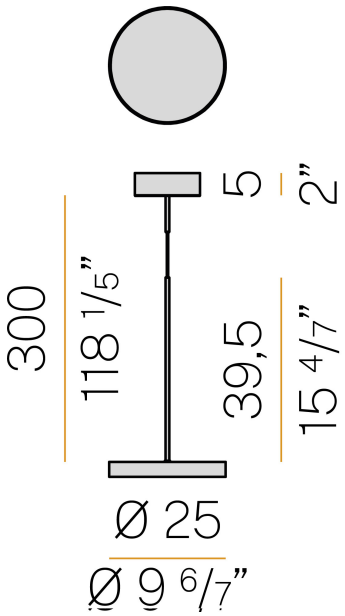
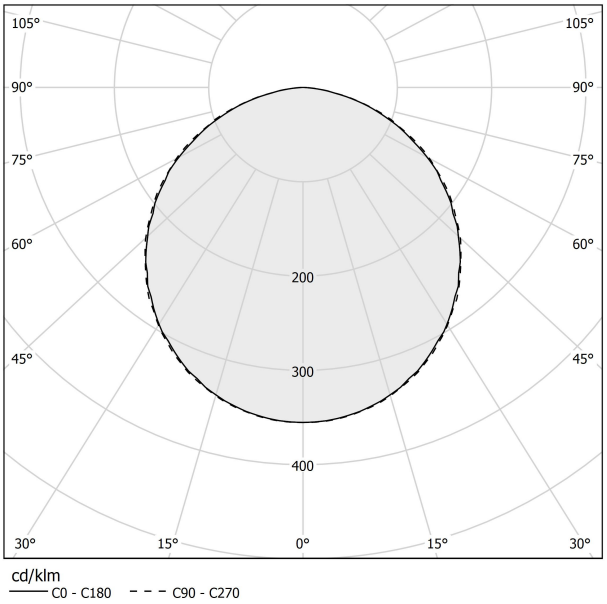
Polar diagram